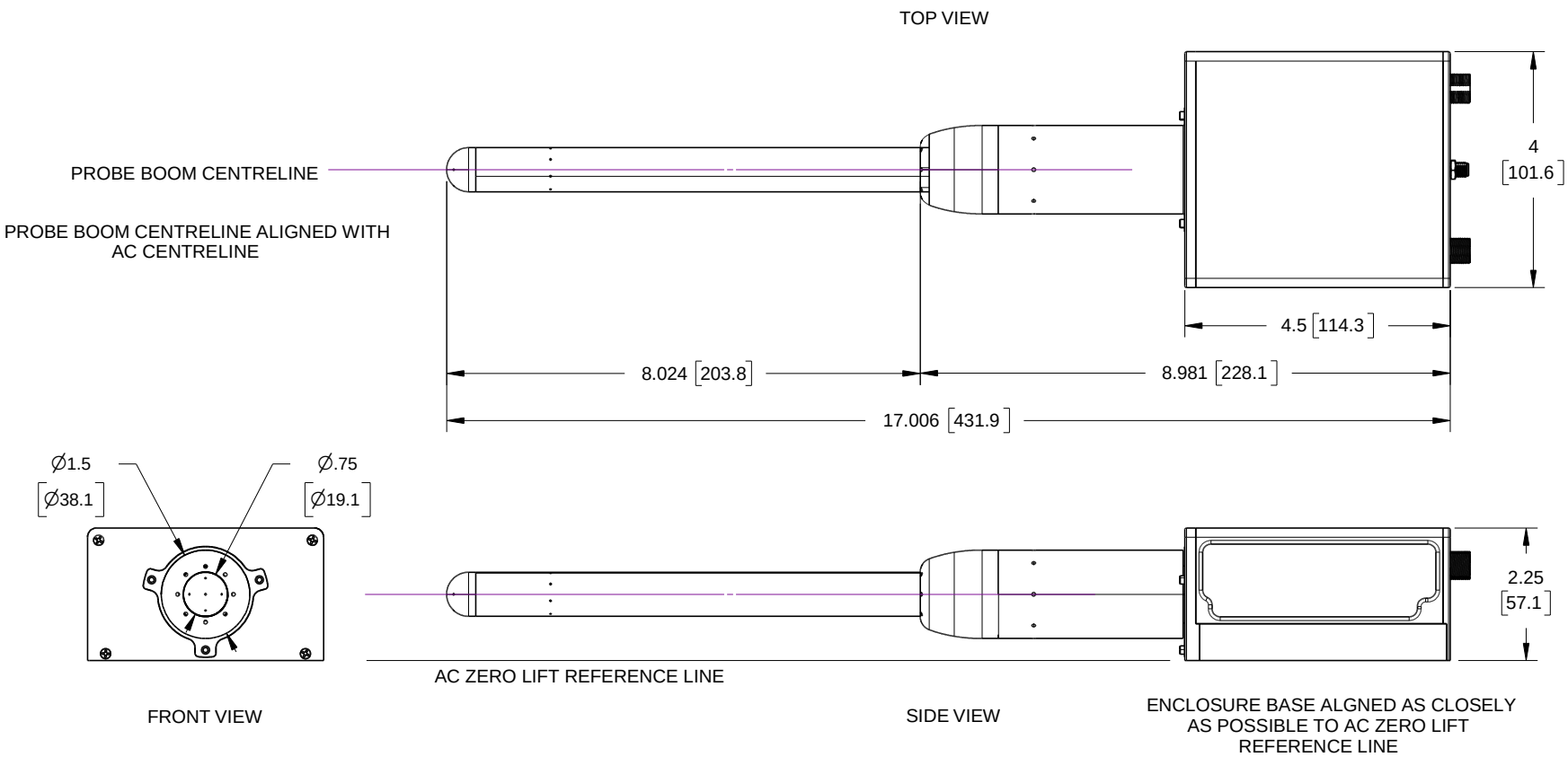

VERTICAL REFERENCE

G REFERENCE

MATERIAL: 6061-T6 ALUMINUM
FINISH: PROBE BOOM: TITANIUM NITRADE (TiN) ON ELCTROLESS NICKEL
ENCLOSURE: BLACK ANODIZED

THE INFORMATION CONTAINED IN THIS DRAWING IS THE SOLE PROPERTY OF AVENTECH RESEARCH INC.. ANY REPRODUCTION IN PART OR AS A WHOLE WITHOUT THE WRITTEN PERMISSION OF AVENTECH RESEARCH INC. IS PROHIBITED.

Aventech Research Inc.

DWG. NO	REVISION	SHEET
ARIM320-TSD	A	2 OF 3